Sheet: 1/1

(*) 1st boom valve: DIM. WHILE SLEWING

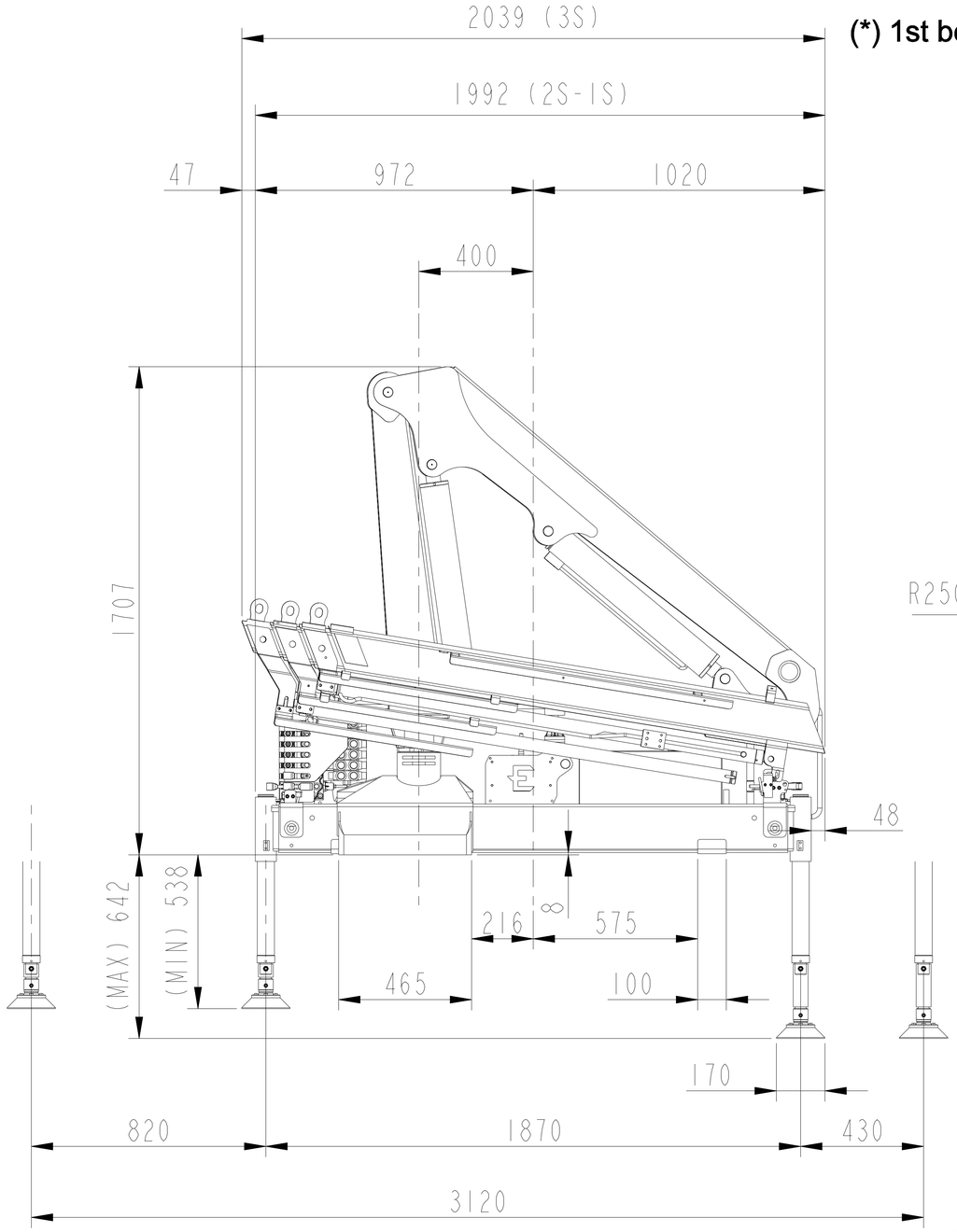

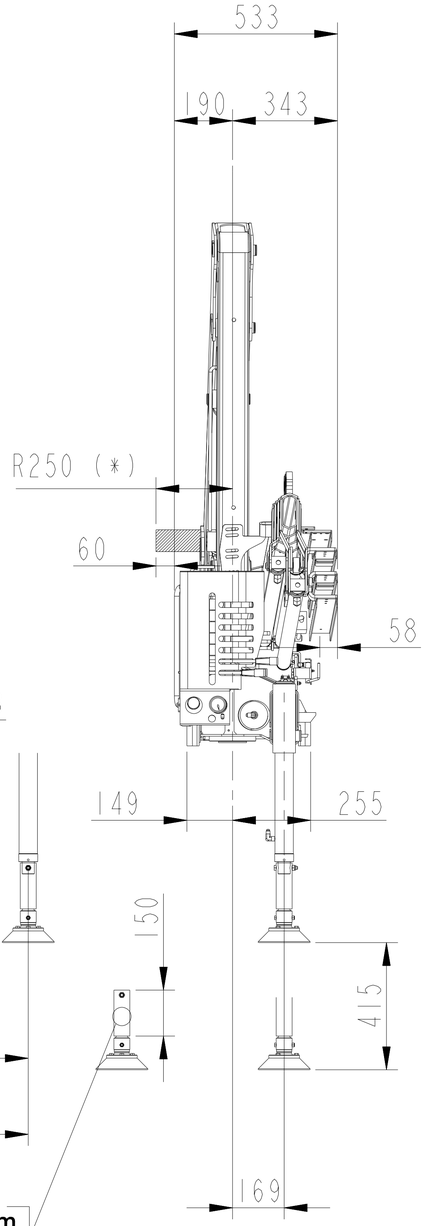

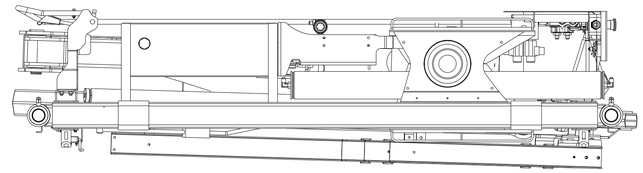

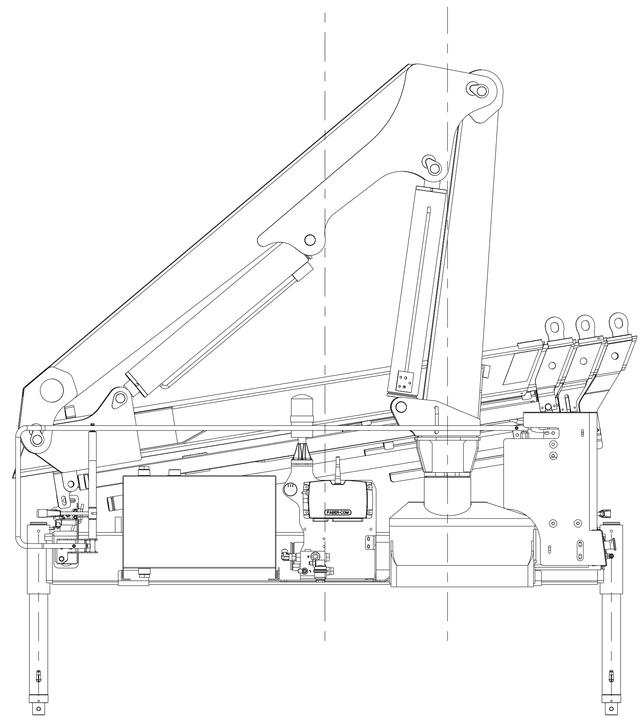

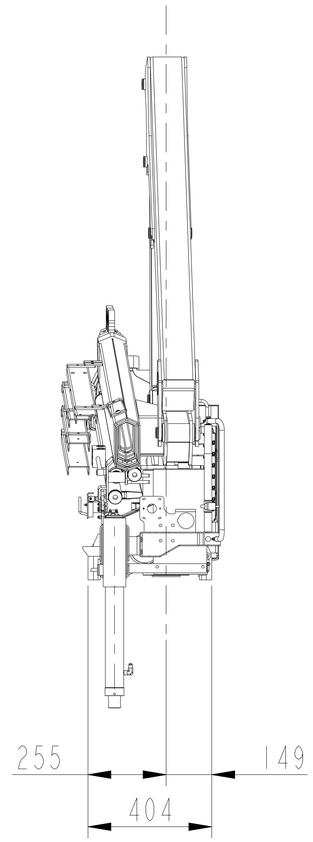

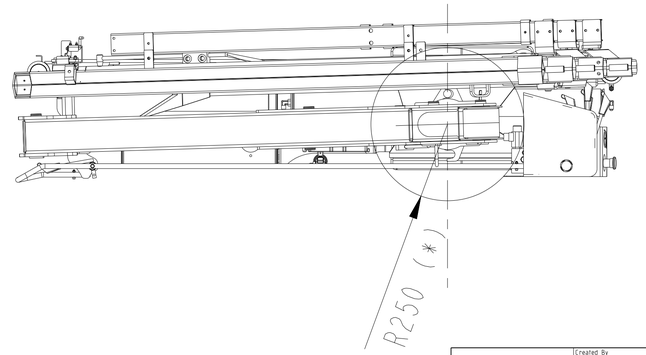

MAXIMUM LENGTH OF FOOT EXTENSION WITH BALL-JOINT ADAPTOR = 150 mm
(SEE DOCUMENT DT00077)

HIAB	Created By: PSZ	Created Date: 2021-10-26	Scale: 1:10	Material Description
	Modified By	Modified Date	Weight (kg)	Surface Treatment / Lifecycle State: Released
This product must be produced according to HIAB standard C1000	Description: X-CLX 038 3S(2S - 1S) Version with remote control - Hose support system		Partnumber: 462-5324	Revision: 0

This drawing is the property of HIAB Cranes and protected in accordance with prevailing law.